KYCON, Inc. 1810 Little Orchard Street, San Jose, CA 95125 (408)494-0330

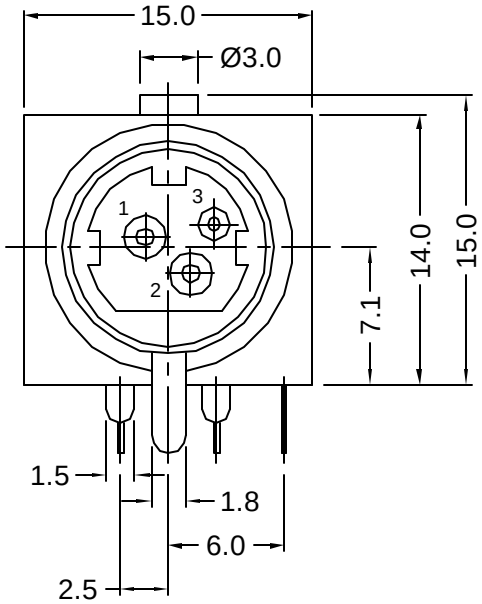

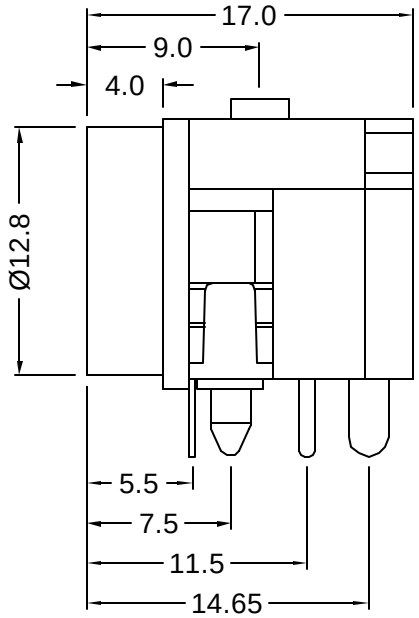

Material and Finish

Inner Shield: copper alloy,
tin plated

Body: PBT thermoplastic
UL94V-0 rated
color - black

Contacts: pins 1 and 2 - brass,
tin plated

pin 3 - phosphor bronze,
tin plated

Electrical Characteristics

Contact Rating:
#1,#2: 7.5A max. @ 20V DC
#3: 1.0A max. @ 20V DC

Insulation Resistance:
50 Megohms min. at 250V DC

Dielectric Strength:
250 V AC rms for 1 minute

Contact Resistance:
50 milliohms max.

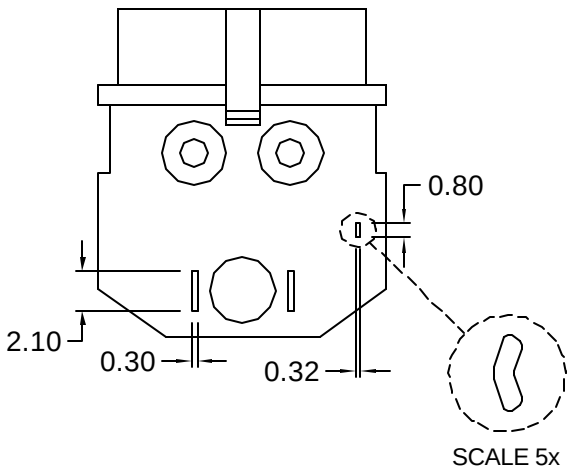

Recommended PCB Layout
(Bottom View)

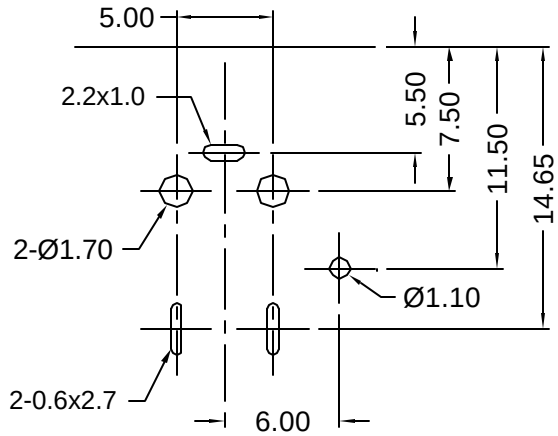

RoHS COMPLIANT
EU Directive 2002/95/EC

C US
LR78160

Tolerances
X.X ± 0.25
X.XX ± 0.15
Unless Stated Otherwise

REV.	DATE	DESCRIPTION	REV. BY	CHK. BY	DRAWN BY	DATE
A1	4/13/05	New Drawing	H. MA	C. Furumasu	H. MA	4/12/05
						UNITS
						mm

KPJX-3S

DC Power Jack, RoHS compliant

3 position. non-shielded

KYCON